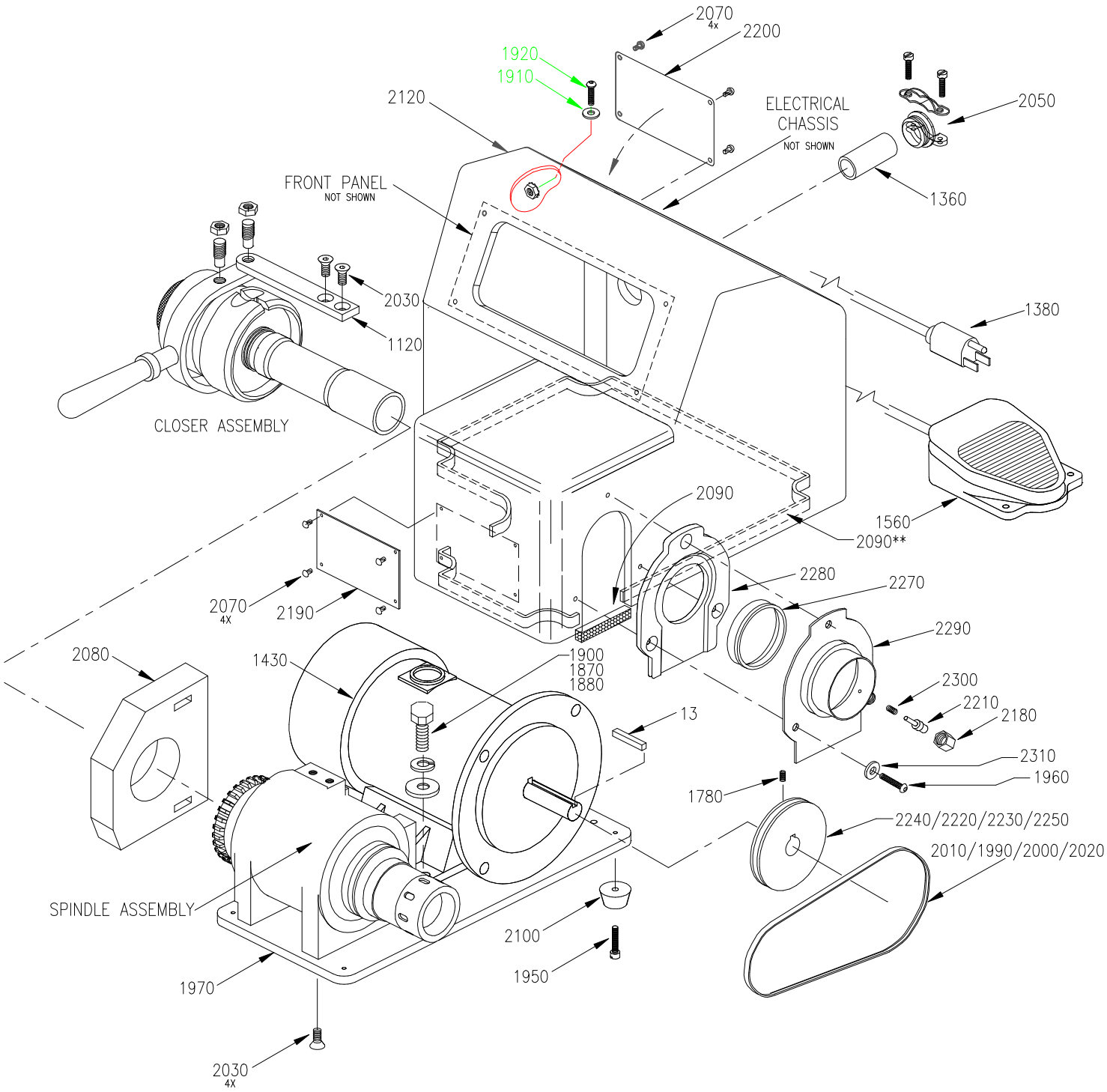

2080, FOAM PARTICLE SEAL,
STRETCH CENTER HOLE OVER
SECTOR PLATE AND THEN
SLIDE AGAINST HEADSTOCK.

** NOT USED ON LT-1B AFTER SERIAL #904
* SERIAL NUMBER REQUIRED FOR THESE ITEMS.